Optical Power Delivery and Data Transmission in a Wireless and Batteryless Microsystem Using a Single Light Emitting Diode

Iskender Haydaroglu and Senol Mutlu, *Member, IEEE*

***Abstract*— In this paper, a light emitting diode (LED) is used both to harvest energy and to transmit data in a wireless and batteryless microsystem. The microsystem consists of an LED die (350 μm × 350 μm), an application specific integrated circuit (230 μm × 210 μm) and a storage capacitor (0.5 mm × 1 mm) forming a small footprint. A modular optical energy management and data transmission framework is presented. A proof of concept design that transmits a 16-bit identification number serially at a data rate depending on the amount of received optical power is described. The LED has a power efficiency of 22%; better than silicon photodiodes under monochromatic light of 680-nm wavelength. The higher voltage supplied by the LED compared with a silicon photodiode allows circuitry to be powered directly from it without requiring the elevation of the photovoltaic potential, as in the case of using on-chip silicon photodiodes. Data transmission task of the LED requires a charge pump circuit to elevate the photovoltaic voltage. The 0.8 V generated by the LED under a 680-nm laser beam of 4-mW/mm^2 optical power density is elevated to 1.4 V for optical transmission at a rate of 4 kbit/s. Under 70-mW/mm^2 optical power density, 1.3 V is elevated to 2.4 V, achieving a data rate of 26 kbit/s. [2013-0194]**

***Index Terms*— Energy harvesting, photovoltaics, light emitting diodes, optical power and data transmission, smart microsystem.**

I. Introduction

WIRELESS microsystems have great potentials as implantable biomedical sensors [1], individually addressable neurostimulators [2], retinal prostheses [3] and in biomedical applications such as active catheter tracking in interventional magnetic resonance imaging (MRI) [4]. In each of these critical application areas, there is an important size constraint on a microsystem, which makes the usage of batteries impractical since this puts a limit to overall size and shortens lifetime. It would also be impractical to use wires for powering these systems. In the case of MRI applications, high power electromagnetic fields inside the machine prohibit long metallic wires as they would heat up quickly, causing injury or discomfort to the patient. Therefore, power and data transmission must be done wirelessly in these applications.

Manuscript received June 14, 2013; revised December 9, 2013; accepted April 27, 2014. Date of publication May 23, 2014; date of current version January 30, 2015. This work was supported in part by the Bogazici University Research Fund under Grant 6037 and Grant 6520, and in part by the State Planning Organization of Turkey through the TAM Project under Grant 2007K120610. Subject Editor C. Mastrangelo.

The authors are with the Department of Electrical and Electronics Engineering, Bogazici University, Istanbul 34342, Turkey (e-mail: iskenderhaydaroglu@gmail.com; senol.mutlu@boun.edu.tr).

Color versions of one or more of the figures in this paper are available online at http://ieeexplore.ieee.org.

Digital Object Identifier 10.1109/JMEMS.2014.2323202

In the context of system miniaturization and wireless power and data transmission, optoelectronic systems have the potential to be smaller than the alternatives. Major energy harvesting technologies involve photovoltaic, piezoelectric, electrostatic, electromagnetic or thermoelectric methods. Among them, photovoltaic technologies deliver the greatest amount of power in the smallest volume [5]. As an example, solar energy harvesting under direct sunlight is reported to have power density of around 3700 μW/cm^2, which can have a factor of five improvement with current highly efficient photovoltaic cells, whereas the closest value to this is around 500 μW/cm^2 with piezoelectric energy harvesting from vibration [5].

Laser beam powering of radio frequency (RF) tags with on-chip silicon photodiodes helped to miniaturize them to 500 × 500 μm^2 sizes [6]. This miniaturization proved valuable in studying ant behavior by tagging individual ants [7] and in tags integrated with MEMS microgrippers [6]. However, in these small RF tags, communication is established by RF signals using on-chip antennas, which works for a distance of around 5 mm. This solution cannot be utilized for smart catheters used in interventional MRI. If a microsystem that can measure physiological data such as temperature, pressure or flow rate is desired on the tip of a 3 Fr MRI catheter, which means a diameter of around one millimeter, data and power transmission to the system must be done wirelessly. Within this size, RF antenna of the system cannot work over about a meter long distance required for MRI machine. In less dimensionally restrictive applications, RF systems can harvest energy and transmit data electromagnetically using a large coil or antenna [2], [8]. Antenna sizes are in the order of one to tens of centimeters when GHz frequency range is used [9] and become greater as frequency declines. They can be reduced to millimeter cube sizes at the cost of increased frequencies, resulting in higher path losses and greater energy requirements [8]. Miniaturized wirelessly powered passive RFID tags operating at 60 GHz are shown to operate with an antenna occupying a total area of 20 mm^2 [10]. Smaller on-chip antennas can be implemented in inductive coupling methods, enabling operation from a distance of 1 mm with low power efficiencies [11].

A practical solution has been demonstrated for this problem with a microsystem aligned to the tip of an optical fiber, where an on-chip photovoltaic cell is used for powering and a separate laser diode for communication [12]. An improvement for such a microsystem would be to use a single light emitting diode (LED) for both energy harvesting

1057-7157 © 2014 IEEE. Personal use is permitted, but republication/redistribution requires IEEE permission.
See http://www.ieee.org/publications_standards/publications/rights/index.html for more information.

Authorized licensed use limited to: TU Hamburg-Harburg. Downloaded on November 05,2024 at 14:21:41 UTC from IEEE Xplore. Restrictions apply.

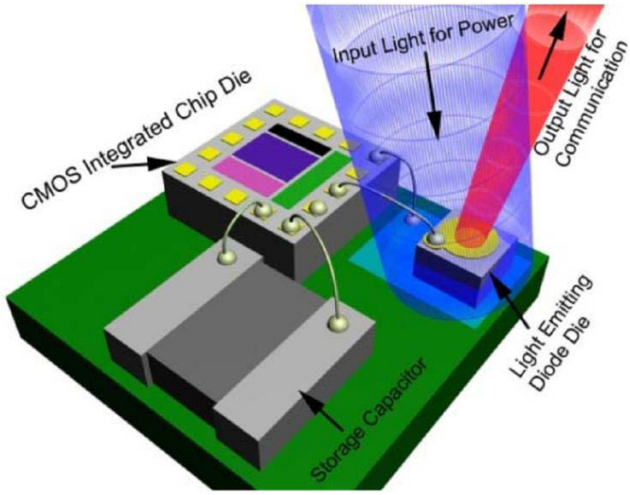

Fig. 1. Conceptual representation of the proposed microsystem.

and data transmission. This would reduce packaging and fiber alignment challenges. The microsystem needs an external optoelectronic element to transmit data optically, as the contemporary silicon CMOS process has no practical means to generate photons. Considering that the use of an external optoelectronic device is unavoidable in this class of optoelectronic microsystems, maximizing the utility of the said external element for additional benefits would enhance such a system. In addition, even though it may be counterintuitive, LEDs are also very efficient photovoltaic energy generators over their limited regions of the electromagnetic spectrum [13].

LEDs have been used as photodetectors in sun photometry due to their sensitivities to desired wavelength ranges [14], [15], in bi-directional fiber optics applications where a single LED is used to transmit and receive data [16] and in a matrix format as tactile sensors [17]. We have demonstrated the use of a single LED both for data transmission and energy harvesting using commercially available discrete electronic components before [18]. However, this is the first time a single LED die (350×350 μm^2) functioning as both power supply and data transmitter is integrated to an application specific integrated circuit (ASIC) die (230×210 μm^2) and a storage capacitor (0.5×1 mm^2) to form a small footprint of miniaturized wireless and batteryless microsystem as depicted in Fig. 1. The microsystem can be packaged in three dimensions to fit to a sphere that has a radius of 500 μm. This type of hybrid packaging of optoelectronic elements with ASIC die using wirebonding is common in literature [12], [19].

This paper is organized in seven sections. Section II describes the advantages of LEDs as photovoltaic cells. Section III explains the details of the microsystem. Section IV presents the experimental results of the LED's photovoltaic response. Explanations of the electrical design of the ASIC and its simulation results are given in detail in Section V. Experimental results of the overall system are presented in Section VI. Conclusion is given in Section VII.

II. Advantages of LEDs as Photovoltaic Cells

Despite being a very attractive alternative among the competing energy scavenging methods, on-chip photovoltaic cells still fall short to supply enough voltage levels to the ASIC. For example, the open circuit voltage of a silicon photodiode is around 0.65 V assuming small current loads [19]–[21]. This voltage level is less than or equal to twice the threshold voltages of transistors in ASIC even in deep submicron technology nodes. This condition may force the designers to operate in subthreshold regimes which complicates matching of transistors for analog design and reduces device performance in both analog and digital circuits [5]. As an example benchmark for analog designs, a bare minimum supply voltage, $V_{DD,min}$, that would allow linear rail to rail input for a CMOS differential pair is calculated as [22]:

$$V_{DD,min} = 2V_{GS} + 2V_{DS,sat} \tag{1}$$

where V_{GS} is the gate-source voltage and $V_{DS,sat}$ is the drain-source saturation voltage of a transistor. Substituting for V_{GS} necessary to keep the transistors in saturation region with ($V_{GS} = V_{th} + V_{DS,sat}$), equation 1 becomes:

$$V_{DD,min} = V_{th,n} + |V_{th,p}| + 4V_{DS,sat} \tag{2}$$

where $V_{th,n}$ and $V_{tp,p}$ are the threshold voltage levels of NMOS and PMOS transistors, respectively. Assuming an average threshold voltage of $|0.4|$ V for contemporary submicron CMOS technologies, and minimum 0.1 V overdrive voltage, the minimum supply voltage must be 1.2 V and above for analog design.

As the silicon photodiode can provide a smaller voltage, methods have been devised to work around this problem. An initially obvious solution is connecting on-chip photodiodes in series, which is problematic in standard CMOS technologies. Two on-chip triple well photodiodes have been connected in series [20], yielding very low output currents and less than twice the open circuit voltage that a single photodiode can provide. Series connection of multiple photodiodes in silicon-on-insulator (SOI) wafers have been demonstrated as a solution [19], [21], however SOI technology is very limited in its availability and more expensive compared to standard CMOS processes.

Elevation of the voltage produced by a single photodiode by means of a charge pump circuit has been demonstrated as an alternative [12]. The problems with this approach are twofold; the power conversion efficiency is very low due to the low supply voltage [23], and the charge pump also has to supply the current demands of the rest of the circuits in the microsystem. Demands of increased current output require increased photodiode area to support the operation of the charge pump and larger switches and capacitors on the charge pump. As a result the charge pump and the photodiode can potentially occupy a large percentage of the chip area just to supply adequate power to the rest of the chip. Finally, the on-chip photodiode region must be optically exposed to the outside world so that voltage can be generated. Optical exposure of the chip to the outside world can cause further problems, as the laser directed on the photodiode can also illuminate adjacent sites. The electron and hole pairs generated by the photons can induce destructive latch-up events on these sites. In fact, directed laser beams have been proposed as

Authorized licensed use limited to: TU Hamburg-Harburg. Downloaded on November 05,2024 at 14:21:41 UTC from IEEE Xplore. Restrictions apply.

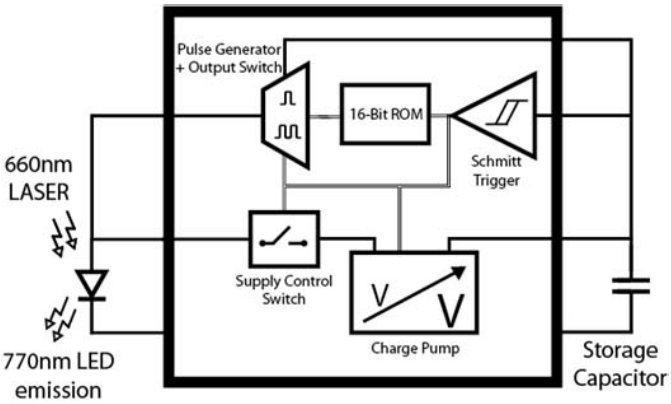

Fig. 2. Block diagram of the microsystem indicating primary components.

a method for testing the proneness of a chip for latch-up at its various sites [24].

Instead an external LED used as a photovoltaic cell can be more beneficial. The benefits of this approach can be listed as follows:

1) By choosing a LED, which has a higher bandgap energy compared to that of silicon, a higher open circuit voltage can be achieved (1.3 V for near infrared, 1.6 V for red, 1.7 V for green, etc. as opposed to 0.5–0.6 V supplied by silicon photodiodes). Circuitry can be run directly from this higher voltage without the need for a charge pump, and thus the charge pump can be designed to only support the transmission of optical data, relaxing the design requirements for the charge pump. The choice of LED material composition also allows a choice for transmission wavelengths.
2) Placing the photodiode outside of the ASIC die saves expensive on-chip area and allows more functional blocks to be integrated to the design.
3) With the photovoltaic cell placed out of the die, the die can be covered in optically opaque material. This makes design more robust against latch-up and noise due to optically generated electron hole pairs.
4) The probability of absorption is higher and therefore photon absorption is more efficient in direct bandgap materials (e.g. AlGaAs) in contrast to indirect bandgap materials (e.g. silicon) [25]. External extraction efficiency of photons, a well-known parameter in LED design, has been demonstrated to maximize power efficiency and open circuit voltage in photovoltaic cells as well. Record level efficiency improvements in GaAs solar cells have been achieved in this way, stressing commonalities between efficient photovoltaic cell and LED designs [13]. Using a commercial LED device optimized for efficient external luminescence is doubly useful as it is also an efficient photovoltaic cell for a limited range of wavelengths that are about 20–30 nm shorter than peak emission wavelength.

III. Microsystem Description

The proposed microsystem consists of a LED die, a storage capacitor and an ASIC die. Its block diagram is shown in Fig. 2. The ASIC is implemented in a standard 0.18 μm CMOS technology to benefit from low threshold voltage values while still having lower static current leakage compared to smaller processes such as 0.13 μm [26]. Other reasons for this choice are its wide availability and low cost. The system operates in energy harvesting and data transmission modes. These modes are controlled by the ASIC. Initially, ASIC puts the LED in energy harvesting mode, converting the optical energy to electrical energy. Electrical energy is stored on a storage capacitor. Once the voltage over the capacitor exceeds a certain value, ASIC puts the LED in data transmission mode. These are achieved by the supply control switch, output switch and Schmitt trigger blocks of the ASIC. The ASIC drives the LED with electrical pulses to generate double light pulses for "logic 0" and single pulse for "logic 1". Charge pump, pulse generator and a 16-bit read only memory (ROM) blocks are used for this purpose. The hardwired ROM data is transmitted repeatedly as long as there is enough stored power. Transmission rate depends on the power of illumination.

The LED is forward biased adequately such that enough current is injected to achieve practically detectable levels of photon emission. The photovoltaic voltage induced by the absorbed photons in the LED is lower than the turn-on voltage of the LED for light emission. Therefore, the generated voltage supplied by the LED must be elevated and stored in a capacitor to intermittently forward bias the LED and generate the desired optical transmission. The optical power output generated by the LED is linearly dependent on the current injected to the LED [25], and a minimum of 1 mA current is aimed to be discharged over the LED during a transmission event. To achieve these minimum current levels, about twice the open circuit voltage of the LED is generated by means of a charge pump, storing the elevated voltage at a storage capacitor for future use.

When the voltage at the storage capacitor reaches the set upper limit, the circuit blocks consisting of charge pump, Schmitt trigger, pulse generating state machine and ROM are isolated from the chip power supply (LED), and the shift register pushes the bit to be transmitted. A single pulse or two pulses in quick succession is generated within a single discharge cycle according to the output of the shift register, signifying logical 1 and 0 values, transmitting a single bit at a time. When the stored voltage drops below the minimum set point the next charge up cycle is initiated for the transmission of the following bit, reconnecting the mentioned circuit blocks back to the LED power supply, stopping the storage capacitor from driving the LED, and commencing charge pump operation.

IV. Photovoltaic Response of LEDs

To test the capabilities of LED as a photovoltaic cell, a commercially available 770 nm AlGaAs LED was exposed to a laser beam of varying intensities generated by a commercially available 660 nm laser diode. Even though, the laser is marked to have 660 nm wavelength, as the case of the laser warms up to a stable temperature, this emission wavelength shifts up and stabilizes to 680 nm. Hence, a laser diode labeled commercially as 660 nm is used after

Authorized licensed use limited to: TU Hamburg-Harburg. Downloaded on November 05,2024 at 14:21:41 UTC from IEEE Xplore. Restrictions apply.

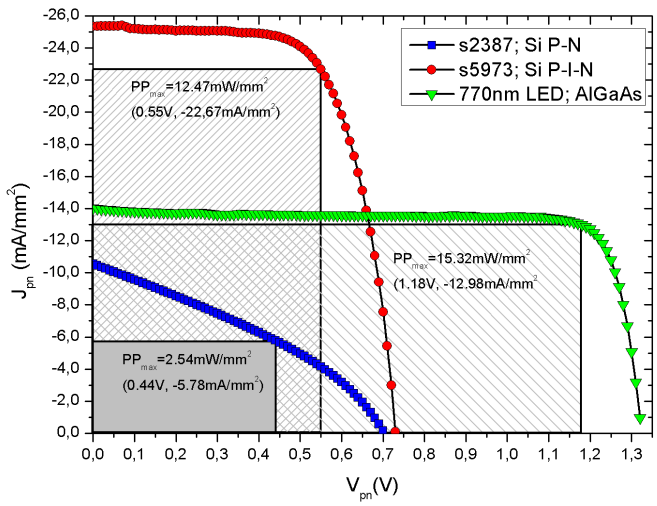

Fig. 3. Current density vs voltage plots for commercial silicon PIN diode, 770 nm LED, and silicon photodiode under 68 mW/mm^2 (120 mW power with a spot size of 1.5 mm diameter) 680 nm laser illumination. Corrected for effective device area; 1.2 mm^2 for S2386, 0.12 mm^2 for S5973 and 0.1 mm^2 for LED.

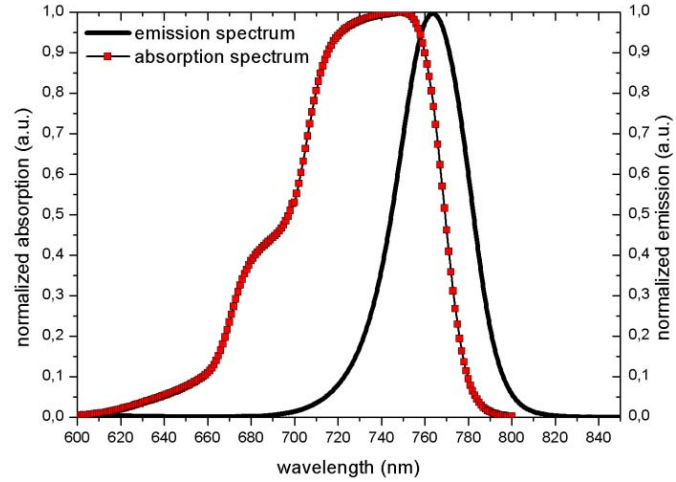

Fig. 4. Normalized absorption and emission spectra of the 770nm LED.

stabilized to 680 nm wavelength in all of the measurements of this work. Optical power of the laser beam was measured using a ThorLabs powermeter with S121C sensor. For comparison purposes, a commercially available silicon photodiode (Hamamatsu S2387) and a PIN silicon photodiode (Hamamatsu S5973), which have better conversion efficiencies than CMOS on-chip photodiodes, are also tested. To make a fair comparison, current density values of the devices are calculated from the obtained current values and active device areas and plotted against obtained voltages as shown in Fig. 3. PIN diodes are expected to have better photovoltaic properties than regular photodiodes. This can be seen in Fig. 3 with a maximum obtained power density of 12.5 mW/mm^2 compared to 2.5 mW/mm^2 for silicon photodiode at an optical power density of 68 mW/mm^2. This is 15.3 mW/mm^2 for the LED, showing a power efficiency of 22%. For laser illumination of 680 nm wavelength, AlGaAs LED performs better than even silicon PIN photodiodes. It also gives twice the open-circuit voltage of the silicon diodes, which increases the efficiencies of the electronic circuits connected to it.

A similar microsystem has been realized using an on chip CMOS photodiode before. Under a 680 nm laser illumination this photodiode powers a charge pump, which then elevates the photovoltaic voltage to 1.2 V to power the analog blocks on the chip. This on-chip CMOS photodiode has a maximum power density of around 2.2 mW/mm^2 and around 0.55 V open-circuit voltage under 68 mW/mm^2 laser illumination [27]. The said photodiode occupies 600 μm x 600 μm on chip area, with additional space taken up by the charge pump. The efficiency of the charge-pump circuit in the related work for this optical power level is around 25%, reducing the available power density for the circuitry to 0.6 mW/mm^2. Using the off-chip LED as a means of power delivery to the system, our approach generates 1.2 V chip supply and 15.3 mW/mm^2 power density, without using a charge pump. Compared to this approach, powering the microsystem through an external LED allows a factor of 25 improvement in the power density delivered to the circuitry without suffering from major area penalties and serving as an optical data transmitter at the same time.

The absorption spectrum of the 770 nm LED is measured to determine the optimal wavelength for power delivery as shown in Fig. 4. The LED has absorption sensitivity from 620 nm to 780 nm and has the highest absorption from 720 to 760 nm. The LED features a distinct shift of about 20 nm between absorption and emission peaks. Similar shifts in emission and absorption spectrum can be observed in previous works with distinct deviations from Gaussian profile with varying lattice materials [15]. The observed shift between absorption and emission spectrum can be explained with the Stokes/Franck-Condon shift, which is well documented in optical devices [25]. This phenomenon is exploited in our design by delivering the power to the device in a wavelength that is far away enough from its emission center-wavelength such that a commercially available external photodiode can be selected to receive the emissions from the LED while remaining less responsive to the high intensity powering light reflecting off the surface of the device.

The photovoltaic potential generated by the LED under illumination with a monochromatic light source (i.e. 680 nm laser beam) shows logarithmic dependence on the power of the incoming light as shown in Fig. 5.

V. Electrical System Design

The ASIC part of the system consists of supply control switch, charge pump, Schmitt trigger, pulse generating state machine, output switch and ROM blocks (Fig. 2). The details of these blocks are explained below.

A. Supply Control Switch

During discharge cycle, the anode of the LED is connected to the storage capacitor, which has voltage higher than the chip supply, V_{DD}, and LED sends pulses of light. To avoid reliability problems with the low voltage transistors, which

Authorized licensed use limited to: TU Hamburg-Harburg. Downloaded on November 05,2024 at 14:21:41 UTC from IEEE Xplore. Restrictions apply.

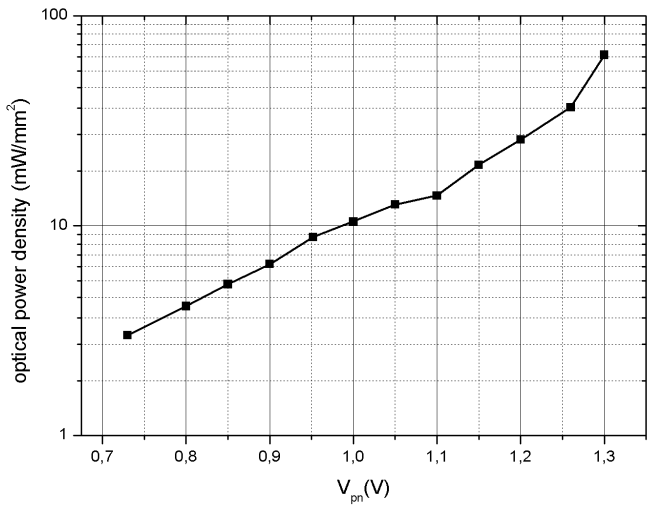

Fig. 5. Plot of power density of the laser vs on-chip supply rail voltage generated by LED showing the logarithmic trend of this voltage with the power of the laser beam.

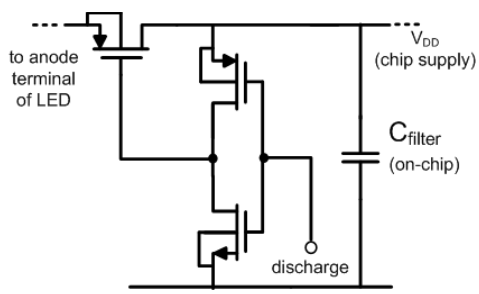

Fig. 6. Supply control switch implemented to disconnect the LED from the chip supply during pulse transmission and reconnect it during the charge-up phase.

compose the majority of the devices within the design, as well as latch-up problems and stability problems with memory elements, the circuit blocks consisting of charge pump, Schmitt trigger, pulse generating state machine and ROM are isolated from the supply (LED) during discharge cycle. This is achieved by disconnecting the anode of the LED from V_{DD}. These circuit blocks are put on standby at this phase. They can hold their states by the power supplied from a smaller on-chip capacitor, C_{filter}, which was charged previously by the same LED. The mentioned connection is established again during charging cycle using the same switch.

The switch is realized using a single PMOS pass transistor instead of a transmission gate as shown in Fig. 6. A well-known problem with the inverter driven transmission gate, used as an analog switch, is that it is prone to latch-up problems when its output is exposed to the outside environment through a pad [28]. The output switch is inevitably connected to an output pad to drive the LED, therefore resistance to latch-up is necessary. The close proximity of NMOS and PMOS transistors in the transmission gate and the inverter form parasitic BJTs connected in positive feedback configuration through substrate, resulting in a structure similar to silicon controlled rectifier (SCR) switches. Sudden spikes in the output pads may inject enough current into this parasitic SCR structure to switch it on. When switched on, these structures are hard to turn off due to the inherent positive feedback, which may require power to be completely turned off to exit this state. Latch-up events can become destructive where the low resistance path from the supply rail to the ground rail induces heating of the die, enhancing current flow in a positive feedback until catastrophic failure of the chip occurs due to the excessive heat generated. Removing the NMOS from the transmission gate helps avoiding one of the two parasitic BJTs in the said unwanted configuration, thereby removing the positive feedback from this configuration and diminishing the probability of a latch-up. Using a pass transistor instead of a transmission gate (Fig. 6) comes at the cost of varying channel resistance in driving the LED, which would cause nonlinearities, but as the system is designed to operate on an on-off keying scheme, transmission of data is not sensitive to such nonlinearities as long as a minimum level of designed current is passed through the LED to enable peak detection.

Assuming zero stored voltage within the inner capacitances of the microsystem, upon receiving laser illumination the LED produces a voltage at the source terminal of the PMOS pass transistor while the gate is held at ground level. As long as the source potential is greater than the threshold voltage of the low voltage pass transistor, the pass transistor turns on and the remaining portions of the system receive the power coming in from the LED. To disconnect the system from the LED, the control logic pulls the PMOS gate voltage to the supply level, which is provided by the small on-chip backup capacitor (C_{filter}), turning it off. The pass transistor remains in cut-off, until it is switched back on by the control logic.

B. Two Stage Cross Coupled Charge Pump

The output voltage of a charge pump has a linear dependence on the difference between the clock signal amplitude and the turn-on voltage of the stages [23]

$$V_{out} = V_{DD} - V_{th} + n\left[\frac{C_p}{C_p + C_s} V_{clk} - V_{th} - \frac{I_{out}}{(C_p + C_s) f_{clk}}\right] \tag{3}$$

The amplitude of clock signal (V_{clk}) that has a frequency of f_{clk} is normally determined by the chip supply voltage (V_{DD}) of the system, whereas the turn-on voltage is due to the threshold voltages (V_{th}) of the MOSFET switches. The amount of charge delivered to following stages depends on the ratio of the pump capacitances (C_p) to the sum of the stray (C_s) and pump capacitances at a given node. A static current load (I_{out}) decreases the output voltage by subtracting charge from the output capacitor whereas a purely capacitive load poses no such problem. As the supply voltages become comparable to threshold voltages of the MOSFETs, the output voltage of the charge pump diminishes, along with the power efficiency of the charge pump. Another important matter is that the voltage at the intermediary nodes becomes higher as the number of stages (n) grows, introducing body effect, raising the threshold voltage at the node and further reducing the voltage gain per stage [23].

Authorized licensed use limited to: TU Hamburg-Harburg. Downloaded on November 05,2024 at 14:21:41 UTC from IEEE Xplore. Restrictions apply.

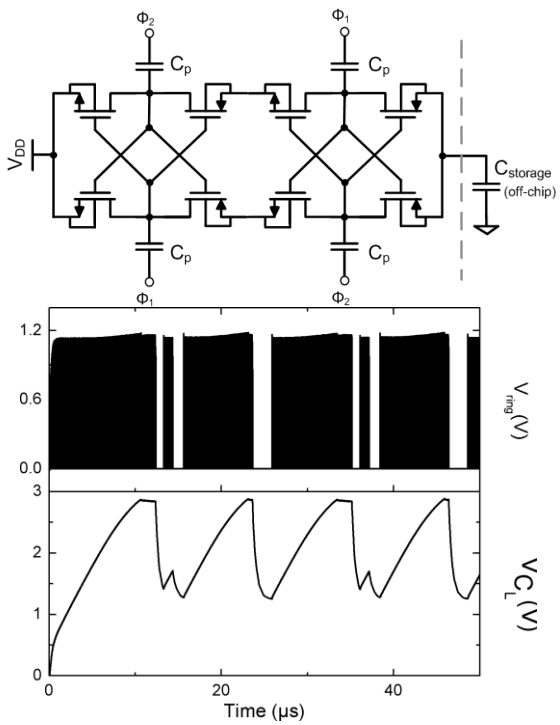

Fig. 7. Top: Two stage cross coupled voltage doubler operating on two antiphase clock signals, charging up an external storage capacitor. Bottom: Simulation for charge pump operation during the transmission of "0101" bit sequence.

There are common measures that can be taken to counter these shortcomings. Biasing the MOSFET switches at a gate voltage higher than their respective drain voltages by means of bootstrapping capacitors is one of them. However, this introduces a relatively complex 4-phase clocking scheme as opposed to the original 2-phase clock. Charge transfer switches based on transmission gates driven by locally generated high amplitude 2-phase clock signals is also a solution [29]. Alternatively, cross coupled dual charge pumps [29], [30] also known as latched charge pumps or Pelliconi charge pumps can be used. In this work, a latched charge pump with cross coupled stages is used (Fig. 7).

Cross coupled voltage doubler schemes in 0.18 μm CMOS process have been demonstrated to be more efficient compared to classical Dickson or bootstrapped charge pump architectures [30], and they impose lower bias stress on the oxide compared to charge transfer switch architectures [29]. A single stage of this charge pump can be viewed as two inverters cross coupled in positive feedback configuration, meaning that an intermediate voltage would be restored to either positive or negative rail of each stage. This minimizes the voltage drops per each stage that would be encountered in a Dickson charge pump while avoiding the additional bootstrap circuitry necessary to bias the gate of a stage to a voltage higher than its drain terminal along with the four phase non-overlapping clocking scheme that complicates design further and drains additional power.

The cross coupled charge pump is also advantageous in terms of device reliability since the voltage drop over the gate to source, drain or bulk does not exceed supply voltage levels [29], which is critical for deep submicron process implementations since overvoltage requirements are more stringent for these technology nodes. As larger buffers driving the pump capacitors create great supply noise, buffers are made deliberately weak to reduce the supply noise and ensure that the flip-flops retain their states without problem. The operation of the charge pump is halted when the stored voltage is being discharged over the LED to prevent noise, which ensures a clean optical signal to be transmitted (Fig. 7). Triple well NMOS devices available with the process have been used to further diminish threshold voltage drops.

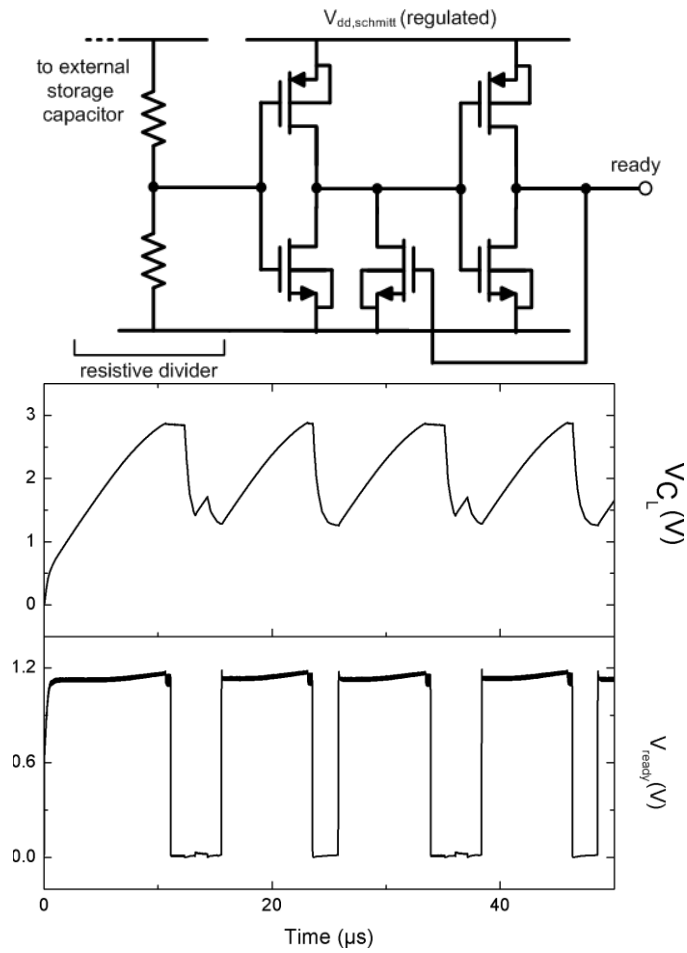

Fig. 8. Top: Schmitt trigger circuit used in this design features long transistors to minimize current consumption during ramp-up of the charge pump output voltage. Bottom: Charge pump output and active low trigger signal to initiate the transmission of pulses for "0101" bit sequence.

C. Schmitt Trigger

According to the operational requirements of the design, the charge pump must run until a set maximum point is reached, and then the storage capacitor must be discharged over the LED until the capacitor voltage reaches a minimum set point, after which the cycle repeats. This implies a need for a hysteresis window, which was implemented by a Schmitt trigger based on inverters and a pull-down network driven by the output of the Schmitt trigger (Fig. 8) [31]. Hysteresis in the transfer characteristic of the Schmitt trigger also provides immunity to noise in the charge pump output. To achieve

Authorized licensed use limited to: TU Hamburg-Harburg. Downloaded on November 05,2024 at 14:21:41 UTC from IEEE Xplore. Restrictions apply.

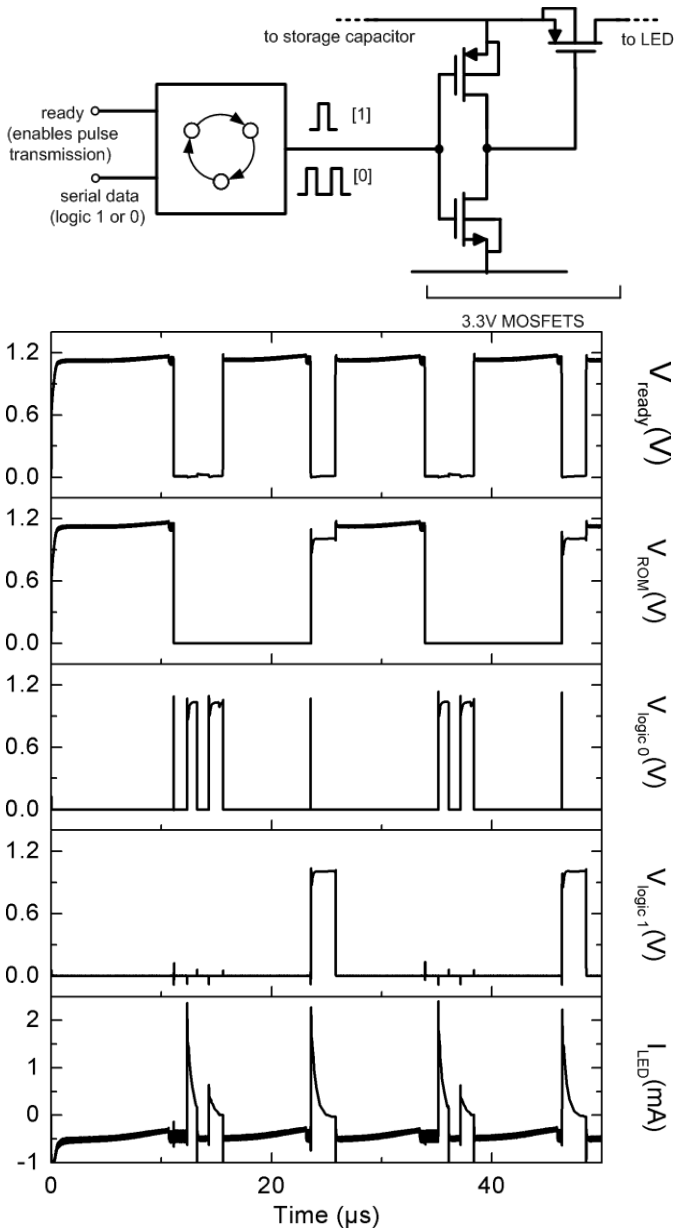

Fig. 9. Top: Representation of the pulse generation mechanism used to discharge the storage capacitance across the LED, featuring a finite state machine and 3.3V high voltage compatible transistors. Bottom: Simulation results for Schmitt trigger output, ROM otput, control signals for two discharge paths and LED for the transmission of "0101" bit sequence.

low current consumption in the transition state, the transistors are chosen to be very long. Charge pump output is sampled through a voltage divider. High resistance poly is used in the divider for its simplicity. Capacitive dividers could also have been used, but the internal node has to be discharged regularly to avoid charge accumulation, complicating the design. Although the resistive divider imposes a current load to the charge pump, it is quite small and does not lower the output voltage of the charge pump.

The Schmitt trigger output acts as a control signal, initiating charge-up and transmission cycles. The amount of optical energy available to the microsystem determines the time it takes to charge up the storage capacitor, therefore the design is self-timed without a need for a global clock signal.

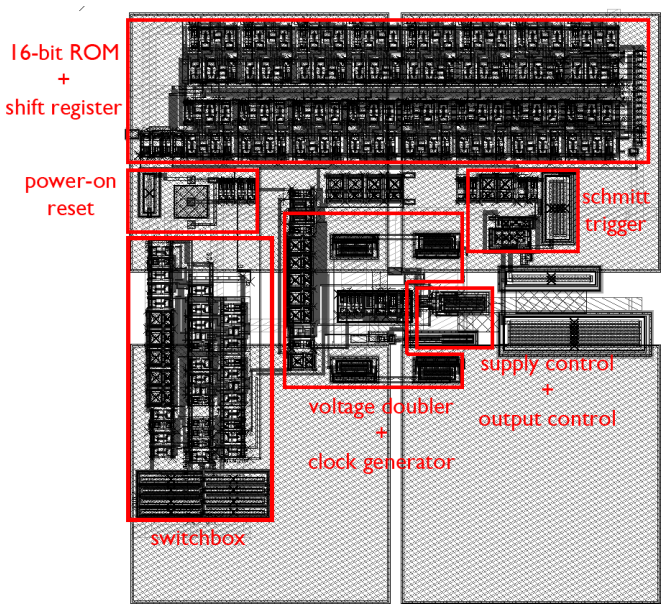

Fig. 10. Layout of the proposed design fits into a 230 μm x 210 μm box, in a 0.18μm CMOS process.

D. Pulse Generation & Output Switch

To keep the necessary circuitry simple and compact, the stored charge is discharged over the LED in single and double pulses to represent logic 1 and 0 values, transmitting a single bit per every charge-up cycle. The double pulses transmitted in quick succession require a small state machine, driven by a slow ring oscillator and a counter (Fig. 9). The charge pump is restarted again in between the two pulses in transmitting a double pulse to accumulate some more charge.

The output switch connects the external LED to the storage capacitor, which has higher voltage than the chip supply voltage, V_{DD}, to generate light pulses during discharge cycles. It is required to withstand voltage levels greater than the recommended supply voltage for the standard 0.18 μm transistors, which is limited to 1.8 V. To avoid breakdown of the gate oxide as well as drain to source punchthrough, 3.3 V transistors available from the used technology were employed in a pass transistor configuration. The output switch transistors isolate the storage capacitor from the LED until a bit of data is to be transmitted, and are switched by the control circuitry according to the stored data to produce the aforementioned single pulse or the two pulses in quick succession.

The described ASIC design capable of energy management and data transmission requires large MIM capacitors for use in charge pump, and its profile can be minimized by locating the circuitry beneath the pump capacitors in the layout of the circuit. The presented implementation fits inside a 230 μm $\times$ 210 μm area as shown in Fig. 10, leaving ample space for other functionalities.

VI. Experimental Results of the Microsystem

The microsystem is realized by hybrid integration of the ASIC die, LED die and a surface mount packaged storage capacitor as shown in Fig. 11. The two stage voltage doubler charge pump circuit of the ASIC was first characterized for

Authorized licensed use limited to: TU Hamburg-Harburg. Downloaded on November 05,2024 at 14:21:41 UTC from IEEE Xplore. Restrictions apply.

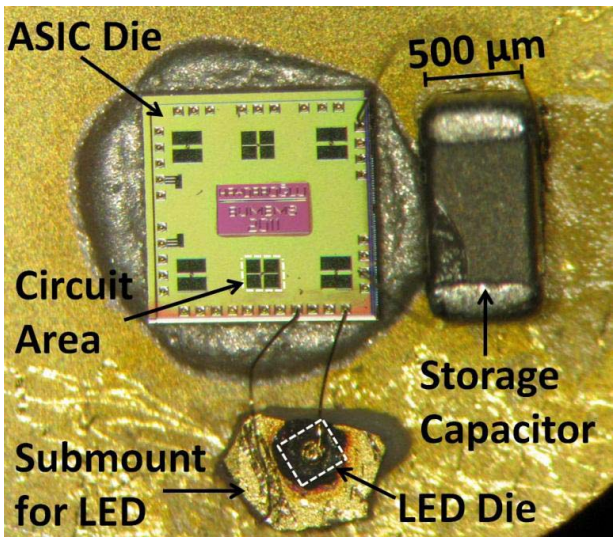

Fig. 11. The proposed microsystem realized by wirebonding the external storage capacitor and the LED die to the ASIC die. The ASIC portion of the microsystem takes up a fraction of the die area, allowing ample space for additional functionalities to be implemented on the same die.

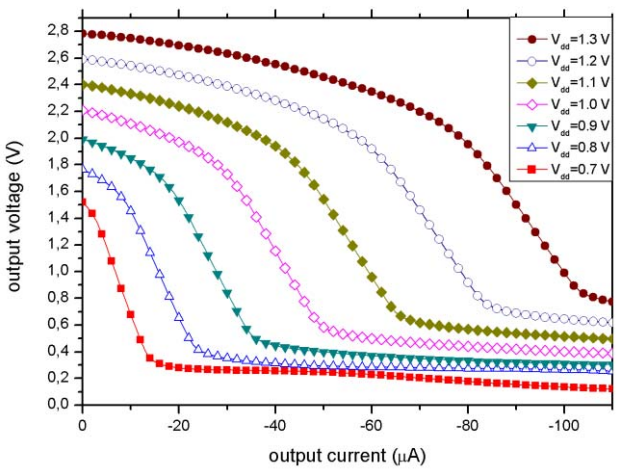

Fig. 12. Two stage voltage doubler charge pump current-voltage characteristics measured under varying input voltages.

a range of chip supply voltage values, V_{DD}, applied electrically through the pads of the chip as shown in Fig. 12. In order to produce detectable photon emissions, a peak LED current in the order of a milliampere was determined as design minimum. The storage capacitor has to be charged to 1.4 V or higher voltage levels in order to conduct milliamperes of current through the LED. This 1.4 V minimum voltage level can be produced with a V_{DD} of 0.8 V by the charge pump. This V_{DD} can be generated by the LED at relatively low illumination levels (below 5 mW/mm^2 power density). Below this minimum voltage, the Schmitt trigger stops functioning, halting the operation of the system. 2.4 V voltage level can be produced with a V_{DD} of 1.3 V that can be generated at 70 mW/mm^2 optical power density. The elevated voltage at the output of the charge pump is lower than ideal due to losses caused by the deliberately weakened clock drivers, which serves to reduce the supply noise, and stray capacitances.

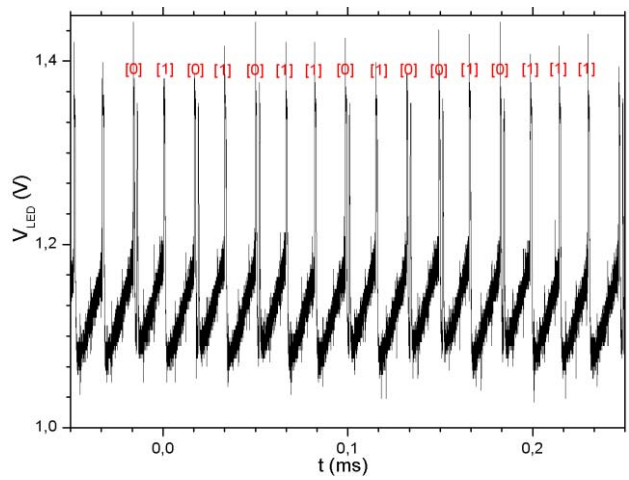

Fig. 13. Microsystem output when connected to an external power supply. The double and single pulses are labeled to reflect the logical values they represent.

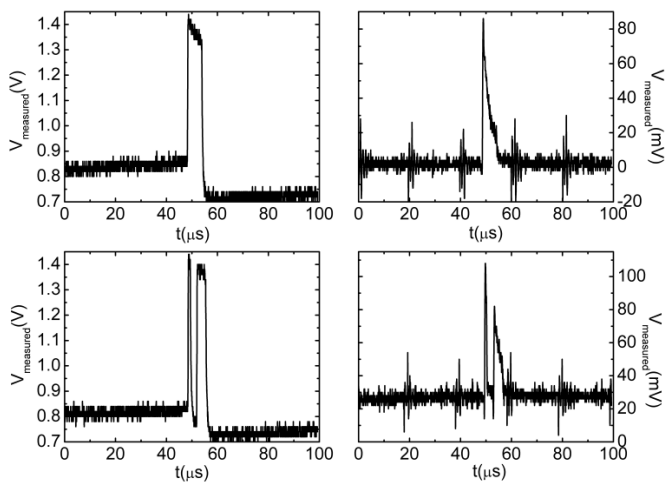

Fig. 14. Single and double pulses detected from the positive terminal of the LED (left column) and by the remote photodetector amplifier (right column).

As a preliminary measurement for verification, LED is connected to the supply rails of the chip and biased to 1.1 V with an external DC power supply. This supply powers the system and gives an opportunity to test it. A 3.9 nF external capacitance is connected to the chip as a storage capacitor. Acquired data shown in Fig. 13 reveal that the same 16-bit word is transmitted repeatedly. Double and single pulses can be identified in this figure. The received data is the same as the stored data in the ROM of the ASIC.

In the final test of the prototype, power is delivered to the LED optically and transmissions of the LED are detected with an external photodetector demonstrating the intended usage of the microsystem. In this all optical test setup, the microsysytem has no electrical connection to the outside world, including the measurement equipment. Similar to previous setups, optical power is delivered using a 680 nm laser beam. The results of a successfully operating microsystem can be seen in Fig. 14. Double and single pulses acquired by probing the pads of the LED (Fig. 14, left column) after the all optical test and by the external photodetector and

Authorized licensed use limited to: TU Hamburg-Harburg. Downloaded on November 05,2024 at 14:21:41 UTC from IEEE Xplore. Restrictions apply.

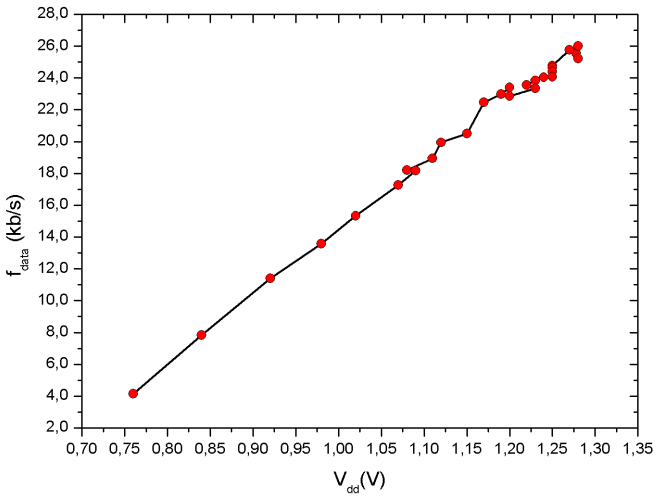

Fig. 15. Data rate following a linear trend with respect to chip supply voltage.

its circuitry (Fig. 14, right column) during the optical test prove that the microsystem works as designed. Putting an opaque but RF transparent obstacle between the LED and the photodetector ends the reception of the signals received by the photodetector amplifier, while removing the obstacle resumes the reception of the optical signals, demonstrating that the LED is transmitting data optically and not by means of stray RF signals.

From the bottom row in Fig.14 it can be seen that the second peak detected by the photodetector amplifier is lower in intensity compared to the first peak. A linear decline in junction bias voltage reflects an exponential drop in LED's forward current, and since the number of emitted photons is proportional to the forward current passed through the LED, the generated optical signal drops in intensity as the storage capacitor is discharged.

The discharge current depends on the channel resistance of the output control switch transistor, which would result in some variation in the duration of the pulses. Therefore, edge detection instead of pulse duration was chosen as the method of representing bits. The detectability of the second edge on the transmission of "logic 0" depends on the amount of charge remaining on the storage capacitor, thus there is a lower limit for the storage capacitor size. Variations in channel resistance of the output switches that could drain the storage capacitor without leaving enough energy for the second pulse of the "logic 0" transmission can be countered by increasing the external storage capacitor, making the design adaptable to variations and increasing yield.

The time intervals between the transmission of consecutive bits change with varying illumination levels. This self-timed nature of the microsystem provides a feedback to the user regarding the amount of power delivered to the LED, which may help in identifying losses in power delivery due to transient variations in the intensity of the projected laser beam or interferences within the transmission media, letting the user know whether adequate power is supplied to the microsystem or not. In the sample measurements in Fig. 15, the chip is able to operate at a minimum supply voltage of 0.78 V at 4 mW/mm^2 laser power density, producing detectable single and double pulses at a data rate of 4 kbit/s. This increases to 26 kbit/s at 70 mW/mm^2 incident power. Data rates in the order of 100 bit/s [19], [20] are reported for previous optically powered microsystems. These data rates are sufficient for monitoring most environmental and biomedical events, where a sampling rate of 1-100 Hz is enough for most applications [32]. The data transmission rate follows a linear trend with respect to chip supply voltage, making it possible for the operator to deduce the actual chip supply voltage based on the rate of arrival of bits. This feature provides valuable information to the operator in case of systems that require certain voltage levels for proper operation. Analog voltage references and integrated sensors may perform inaccurately below a minimum supply voltage, producing unreliable results.

A temperature measuring microsystem placed on the tip of a 3 Fr catheter to study RF induced heating of tissues in MRI can be an example for integrated sensors and voltage references. A temperature sensor and the necessary analog and digital blocks can be placed on low-power ASIC for this purpose. A subbandgap reference generator including differential amplifiers can be used with a power consumption of 4 μW. A 14-bit successive-approximation-register (SAR) analog-to-digital converter (ADC) can consume 2 μW power assuming it uses open loop operational transconductance amplifier (OTA) based comparator. Digital blocks such as pulser, parallel and shift registers and possibly a microcontroller can consume around 5 μW power. Therefore, addition of a temperature sensor to the current microsystem would add an additional power consumption of around 11 μW. As shown in this work, with 4 mW/mm^2 laser power density and 22% LED conversion efficiency, 88 μW of electrical power is generated on the system. This is enough to run multiple sensors.

Low power ADC mentioned above typically needs around 250 μs to prepare one bit of data. In total 3.5 ms may be needed for a 14 bit temperature data to be ready and saved into a register, after which the sensor system can be turned off. This should be followed by a transmission stage, which is demonstrated in this work. Experimental results show that this system operates with a minimum data rate of 4 kbit/s at 4 mW/mm^2 laser power density, meaning that a bit is transmitted every 250 μs. If this system is used with a temperature sensor, it will take 3.5 ms to prepare the 14 bit data and 3.5 ms to transmit these bits. As a trade-off, the lowest data rate of 4 kbit/s measured in this work will drop to 2 kbit/s if the current microsystem is modified to have the mentioned temperature sensor. Similarly, the measured 26 kbit/s data rate (each bit is transmitted every 38 μs) at 70 mW/mm^2 laser power density will drop to 3.5 kbit/s.

The current system consumes about 1 mW power in the last 3.5 μs of the 250 μs transmission period to transmit a single bit (3.5 nJ) under 4 mW/mm^2 laser power density. The initial part of 250 μs is used to store enough energy on the storage capacitor to transmit single bit. However, since during this stage charge pump circuit is used and this circuit has around 16% efficiency, stored energy becomes limited to 3.5 nJ, as measured and shown in this work. That is why this system does not work at a lower laser power density than

Authorized licensed use limited to: TU Hamburg-Harburg. Downloaded on November 05,2024 at 14:21:41 UTC from IEEE Xplore. Restrictions apply.

4 mW/mm^2. This discussion points to one of the shortcomings of the system, which is to use a charge pump circuit. The charge pump circuits have low efficiencies at these low power levels because of the threshold voltage drops of the transistors. This microsystem can be made to work under lower optical power densities if the transmissions at the LED can be achieved without using a charge pump circuit.

VII. Conclusion

The presented work defines an energy management and data transmission framework for optically powered and optically communicating batteryless microsystems intended for biomedical applications. Optoelectronic microsystems based on standard silicon processes can be designed to harvest optical energy. However, transmission of optical data inevitably requires an external, dedicated optoelectronic device in the form of a LED or a laser diode. The presented approach combines the energy harvesting capabilities of the LED with its well-known and well used data transmission capabilities to obtain higher supply voltages than that could be obtained with silicon photodiodes and save expensive on-chip area. An application specific integrated circuit (ASIC) design to intermittently transmit data through the energy harvesting LED is presented to demonstrate this concept. Biomedical applications such as active catheter tracking in interventional magnetic resonance imaging, implantable biomedical sensors and individually addressable neurostimulators could benefit from this approach, where the immediate delivery of higher voltages in comparison to silicon photodiodes could simplify design and increase efficiency and small footprints of LEDs could help miniaturization.

Acknowledgment

We would like to thank to Dr. Ozcan BAZKIR and TUBITAK UME Optics Laboratory for the absorption characteristics measurements of the LEDs used in this work.

References

[1] S. Ayazian, V. A. Akhavan, E. Soenen, and A. Hassibi, "A photovoltaic-driven and energy-autonomous CMOS implantable sensor," *IEEE Trans. Biomed. Circuits Syst.*, vol. 6, no. 4, pp. 336–343, Aug. 2012.

[2] D. S. Freedman, P. S. Spuhler, E. Cevik, M. S. Unlu, and M. Sahin, "Addressable floating light activated micro-electrical stimulators for wireless neurostimulation," in *Proc. 5th Int. IEEE/EMBS Conf. NER*, Apr./May 2011, pp. 486–489.

[3] T. Schanze *et al.*, "An optically powered single channel stimulation implant as test system for chronic biocompatibility and biostability of miniaturized retinal vision prostheses," *IEEE Trans. Biomed. Eng.*, vol. 54, no. 6, pp. 983–992, Jun. 2007.

[4] S. Fandrey, S. Weiss, and J. Muller, "Development of an active intravascular MR device with an optical transmission system," *IEEE Trans. Med. Imag.*, vol. 27, no. 12, pp. 1723–1727, Dec. 2008.

[5] A. Wang, B. H. Calhoun, and A. P. Chandrakasan, *Sub-Threshold Design for Ultra Low-Power Systems*. New York, NY, USA: Springer, 2006.

[6] K. E. Laflin, C. J. Morris, N. Bassik, M. Jamal, and D. H. Gracias, "Tetherless microgrippers with transponder tags," *J. Microelectromech. Syst.*, vol. 20, no. 2, pp. 505–511, Apr. 2011.

[7] E. J. Robinson, F. D. Smith, K. M. Sullivan, and N. R. Franks, "Do ants make direct comparisons?" *Proc. Roy. Soc. B, Biol. Sci.*, vol. 276, no. 1667, pp. 2635–2641, Jul. 2009.

[8] B. W. Cook, S. Lanzisera, and K. S. J. Pister, "SoC issues for RF smart dust," *Proc. IEEE* , vol. 94, no. 6, pp. 1177–1196, Jun. 2006.

[9] K. V. S. Rao, P. V. Nikitin, and S. F. Lam, "Antenna design for UHF RFID tags: A review and a practical application," *IEEE Trans. Antennas Propag.*, vol. 53, no. 12, pp. 3870–3876, Dec. 2005.

[10] P. Pursula *et al.*, "Millimeter-wave identification—A new short-range radio system for low-power high data-rate applications," *IEEE Trans. Microw. Theory Techn.*, vol. 56, no. 10, pp. 2221–2228, Oct. 2008.

[11] L. H. Guo *et al.*, "A small OCA on a 1×0.5-mm^2 2.45-GHz RFID tag-design and integration based on a CMOS-compatible manufacturing technology," *IEEE Electron Device Lett.*, vol. 27, no. 2, pp. 96–98, Feb. 2006.

[12] O. Aktan *et al.*, "Optoelectronic CMOS power supply unit for electrically isolated microscale applications," *IEEE J. Sel. Topics Quantum Electron.*, vol. 17, no. 3, pp. 747–756, May/Jun. 2011.

[13] O. D. Miller, E. Yablonovitch, and S. R. Kurtz, "Strong internal and external luminescence as solar cells approach the Shockley–Queisser limit," *IEEE J. Photovolt.*, vol. 2, no. 3, pp. 303–311, Jul. 2012.

[14] F. M. Mims, III, "Sun photometer with light-emitting diodes as spectrally selective detectors," *Appl. Opt.*, vol. 31, no. 33, pp. 6965–6967, 1992.

[15] Y. B. Acharya, "Spectral and emission characteristics of LED and its application to LED-based sun-photometry," *Opt. Laser Technol.*, vol. 37, no. 7, pp. 47–50, 2005.

[16] S. Bent, A. Moloney, and G. Farrell, "LEDs as both optical sources and detectors in bi-directional plastic optical fibre links," in *Proc. IET Irish Signals Syst. Conf.*, Jun. 2006, pp. 345–349.

[17] J. Rossiter and T. Mukai, "A novel tactile sensor using a matrix of LEDs operating in both photoemitter and photodetector modes," in *Proc. IEEE Sensors*, Oct./Nov. 2005, p. 4.

[18] I. Haydaroglu and S. Mutlu, "Energy harvesting and data transmitting microsystem using a light emitting diode," in *Proc. Int. Conf. Opt. MEMS Nanophoton.*, Aug. 2011, pp. 87–88.

[19] B. A. Warneke *et al.*, "An autonomous 16 mm 3 solar-powered node for distributed wireless sensor networks," in *Proc. IEEE Sensors*, vol. 2. Orlando, FL, USA, Jun. 2002, pp. 1510–1515.

[20] D. O'Brien *et al.*, "Design and implementation of optical wireless communications with optically powered smart dust motes," *IEEE J. Sel. Areas Commun.*, vol. 27, no. 9, pp. 1646–1653, Dec. 2009.

[21] M. Ferri, D. Pinna, P. Malcovati, E. Dallago, and G. Ricotti, "Integrated stabilized photovoltaic energy harvester," in *Proc. 16th IEEE ICECS*, Dec. 2009, pp. 299–302.

[22] J. H. Huijsing, R. Hogervorst, and K.-J. de Langen, "Low-power low-voltage VLSI operational amplifier cells," *IEEE Trans. Circuits Syst. I, Fundam. Theory Appl.*, vol. 42, no. 11, pp. 841–852, Nov. 1995.

[23] P. Feng and T. Samaddar, *Charge Pump Circuit Design*. New York, NY, USA: McGraw-Hill, 2006.

[24] D. McMorrow *et al.*, "Laser-induced latchup screening and mitigation in CMOS devices," *IEEE Trans. Nucl. Sci.*, vol. 53, no. 4, pp. 1819–1824, Aug. 2006.

[25] P. Bhattacharya, *Semiconductor Optoelectronic Devices*. Englewood Cliffs, NJ, USA: Prentice-Hall, 1994.

[26] N. H. E. Weste and D. Harris, *CMOS VLSI Design*, 3rd ed. Upper Saddle River, NJ, USA: Pearson Education, 2005.

[27] B. Sarioglu, O. Aktan, A. Oncu, S. Mutlu, G. Dundar, and A. D. Yalcinkaya, "An optically powered CMOS receiver system for intravascular magnetic resonance applications," *IEEE Trans. Emerg. Sel. Topics Circuits Syst.*, vol. 2, no. 4, pp. 683–691, Dec. 2012.

[28] P. Horowitz and W. Hill, *Art of Electronics*. Cambridge, U.K.: Cambridge Univ. Press, 2001.

[29] M.-D. Ker, S.-L. Chen, and C.-S. Tsai, "Design of charge pump circuit with consideration of gate-oxide reliability in low-voltage CMOS processes," *IEEE J. Solid-State Circuits*, vol. 41, no. 5, pp. 1100–1107, May 2006.

[30] D. Baderna, A. Cabrini, G. Torelli, and M. Pasotti, "Efficiency comparison between doubler and Dickson charge pumps," in *Proc. IEEE ISCAS*, vol. 2. May 2005, pp. 1891–1894.

[31] M. Steyaert and W. Sansen, "Novel CMOS Schmitt trigger," *Electron. Lett.*, vol. 22, no. 4, pp. 203–204, Feb. 1986.

[32] M. Hempstead, M. J. Lyons, D. Brooks, and W. Gu-Yeon, "Survey of hardware systems for wireless sensor networks," *J. Low Power Electron.*, vol. 4, no. 1, pp. 11–20, Apr. 2008.

Authorized licensed use limited to: TU Hamburg-Harburg. Downloaded on November 05,2024 at 14:21:41 UTC from IEEE Xplore. Restrictions apply.

Iskender Haydaroglu received the B.S. degree in 2007 from the Electrical and Electronics Engineering Department, Bilkent University, Ankara, Turkey, and M.Sc. degree in 2009 from Bogazici University, Istanbul, Turkey. He is currently working toward Ph.D. degree in Bogazici University, in the field of wireless batteryless smart microsystems.

Senol Mutlu (M'06) received the B.S. degree in electrical engineering from the University of Southern California, Los Angeles, in 2000, and the M.S. and Ph.D. degrees in electrical engineering from the University of Michigan, Ann Arbor, in 2002 and 2005 respectively, with a focus on microsystems.

He is currently an associate professor with the Department of Electrical and Electronics Engineering at Bogazici University, Istanbul. His research interests include MEMS, organic electronics, microfluidics, and integrated wireless sensors and actuators. He is the founder and director of Bogazici University's Micro Electro Mechanical Systems (BUMEMS) Laboratory.

Authorized licensed use limited to: TU Hamburg-Harburg. Downloaded on November 05,2024 at 14:21:41 UTC from IEEE Xplore. Restrictions apply.